REV.	DATE	ECN NO.	MODIFICATION	APPROVER
A	2017/03/15	/	NEW	Jason
B	2018/10/17	RD00318101701	结构变更	Jason

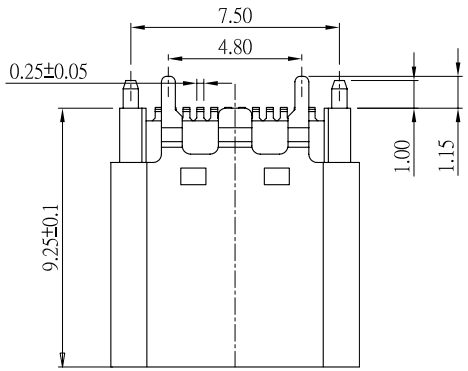

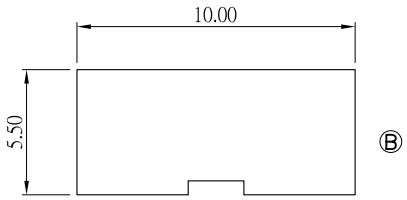

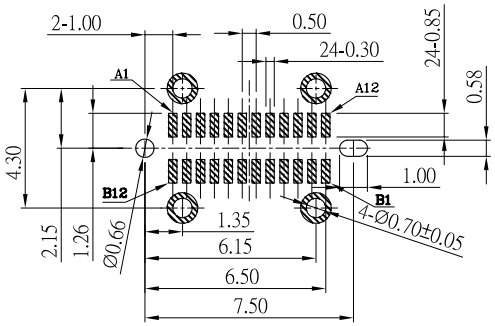

RECOMMENDED P.C.B LAYOUT

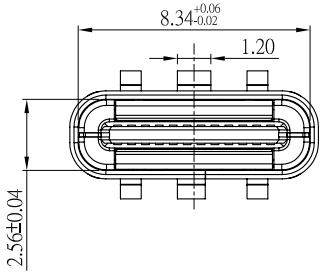

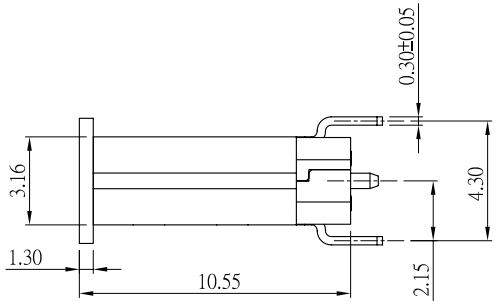

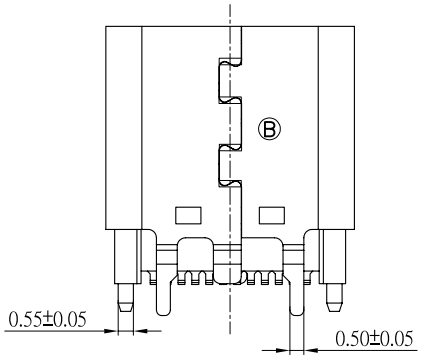

NOTE:
1.MATERIAL:
1.1 INSULATOR: HIGH TEMPERATURE PLASTIC UL 94 V-0;
1.2 CONTACT: COPPER ALLOY
1.3 SHELL:STAINLESS STEEL
2.ELECTRICAL CHARACTERISTICS;
2.1 CONTACT RESISTANCE: 40mΩ Max FOR INITIAL. 30mΩ CHANGE AFTER TEST. MEASURE AT 20mV, 100mA.
2.2 CONTACT CURRENT RATING: 5A FOR VBUS PIN; 1.25A FOR VCONN PIN.
2.3 DIELECTRIC WITHSTANDING VOLTAGE: 100V AC R.M.S.
2.4 INSULATION RESISTANCE 100MΩ Min
2.5 OPERATING TEMPERATURE: -40°C ~ 85°C
3 MECHANICAL CHARACTERISTICS:
3.1 MATING FORCE: 5~20 N.
3.2 UNMATED FORCE: 8~20N AFTER TEST
3.3 DURABILITY: 10,000 CYCLES
4.PLATING
4.1 TERMINAL CONTACT: 1u" GOLD PLATING ALL OVER NICKEL AND Tin ALL OVER NICKEL ON SOLDER AREA
4.2 SHELL:. NICKEL ALL OVER.

GENERAL TOLERANCE			
SELECT	✓		
TOL. / ON.	1	2	3
X.XXX	±0.10	±0.05	±0.15
X.XX	±0.20	±0.13	±0.25
X.X	±0.30	±0.25	±0.50
X.		±0.38	±1.00
ANGLE	±1°		

UNITS mm
MAT'L
FINISH
Q'TY

NAME: USB
PART NO: USB624FC-D2005203
APPD: Jason
CHKD: Vicky
DR: Jillian

ATOM® 深圳市爱特姆科技有限公司 SHENZHEN ATOM TECHNOLOGY CO., LTD.

TITLE: Customer Drawing For USB 3.1 24P FEMALE 立式SMT C TYPE外壳四脚插板 带定位柱 带夹持盖 短体9.30

DWG NO. ATOM-A04081

SCALE	SHEET	REV
1:1	1/1	B