REV	REVISION RECORD	APPROVED

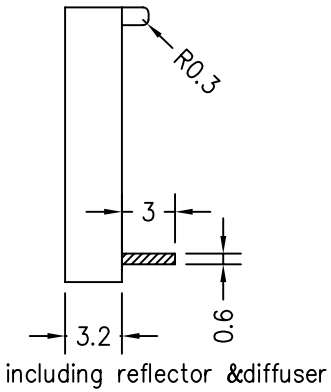

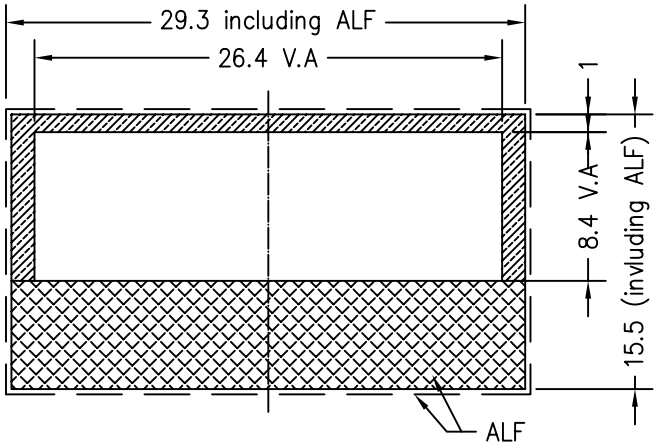

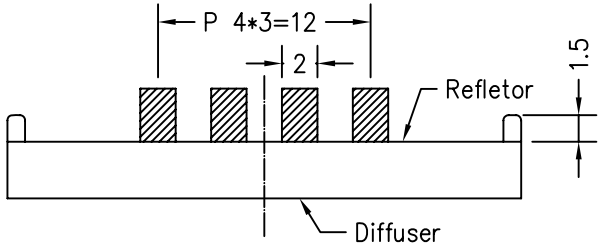

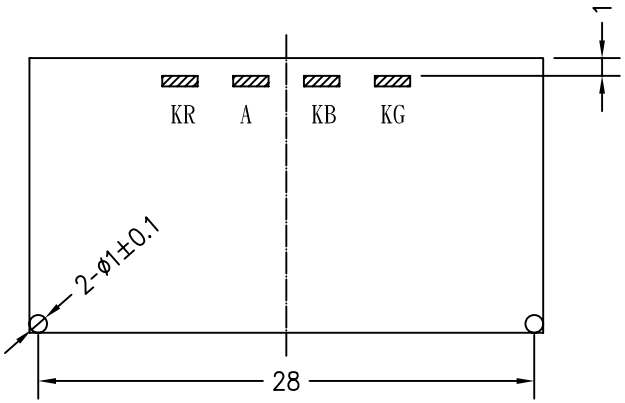

NOTES:

1. Forward current: Red (If=15mA, Vf=2.0V)
   Green (If=15mA, Vf=3.1V)
   Blue (If=15mA, Vf=3.1V)
2. LED emission color: RGB
3. Peak emission wavelength: Red (625nm typ.)
   Green (515nm typ.)
   Red (465nm typ.)
4. Brightness: Red (120 cd/m² typ.)
   Green (250 cd/m² typ.)
   Blue (100 cd/m² typ.)
5. Operation temperature: -20°C~+85°C
6. Storage temperature: -30°C~+100°C
7. Lead free process
8. LED circuit:

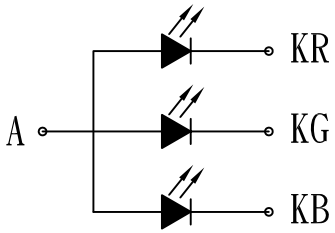

General Tolerance ±				
DIM \ Level	1	2	3	4
0-3	0.05	0.1	0.1	0.2
3-10	0.05	0.1	0.1	0.2
10-50	0.05	0.1	0.2	0.3
50-100	0.1	0.2	0.3	0.5
100-150	0.1	0.2	0.5	0.8
Level Select			◎	

	VERSION	DATE	
	B	2011.03.08	PART NAME:
SCALE	NO.	UNIT	TITLE:
	1/1	mm	
APPROVED	CHECKED	DRAWN	FILE NAME: