REV	REVISION RECORD	APPROVED
A	First Issue	

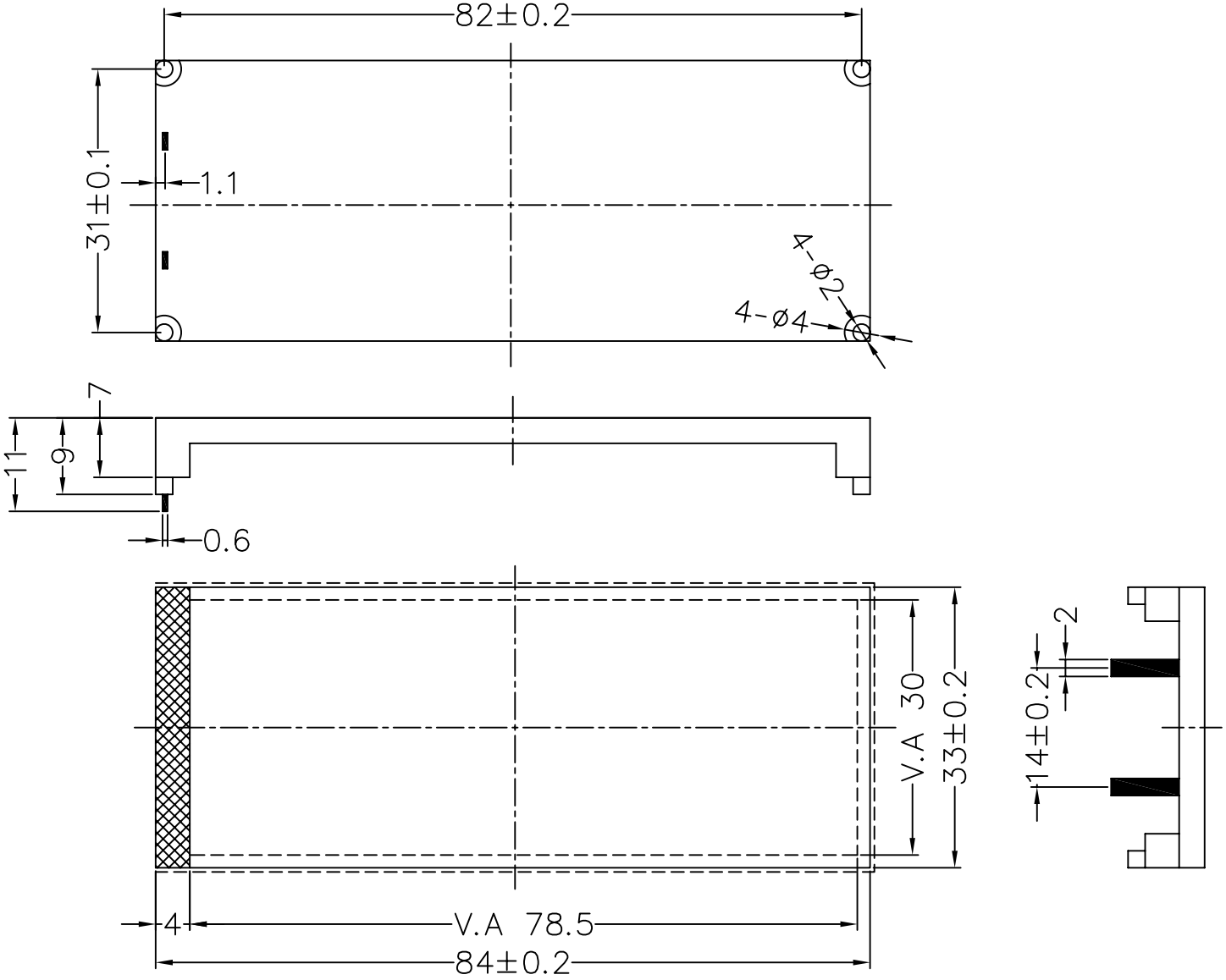

NOTES:

1. Forward current:VF=3.3V,IF=100mA(type)
2. LED emission colour:Blue
3. Peak emission wavelength:470nm
4. Brightness: 100cd/m²(type)
5. Operation temperature:-30° C~+70° C
6. Storage temperature:-40° C~+80° C
7. Lead free process
8. LED ciruit:

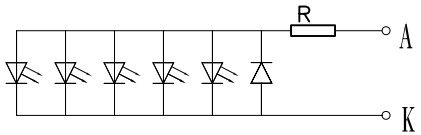

General Tolerance ±				
DIM / Level	1	2	3	4
0-3	0.05	0.1	0.1	0.2
3-10	0.05	0.1	0.1	0.2
10-50	0.05	0.1	0.2	0.3
50-100	0.1	0.2	0.3	0.5
100-150	0.1	0.2	0.5	0.8
Level Select				◎

	VERSION	DATE	PART NAME:
	A		
SCALE	NO.	UNIT	TITLE:
	1/1	mm	
APPROVED	CHECKED	DRAWN	FILE NAME: